NEWLINK
Cabling Systems

NEW-366220X

UTP Cat-6 Keystone Jack 180 Degree

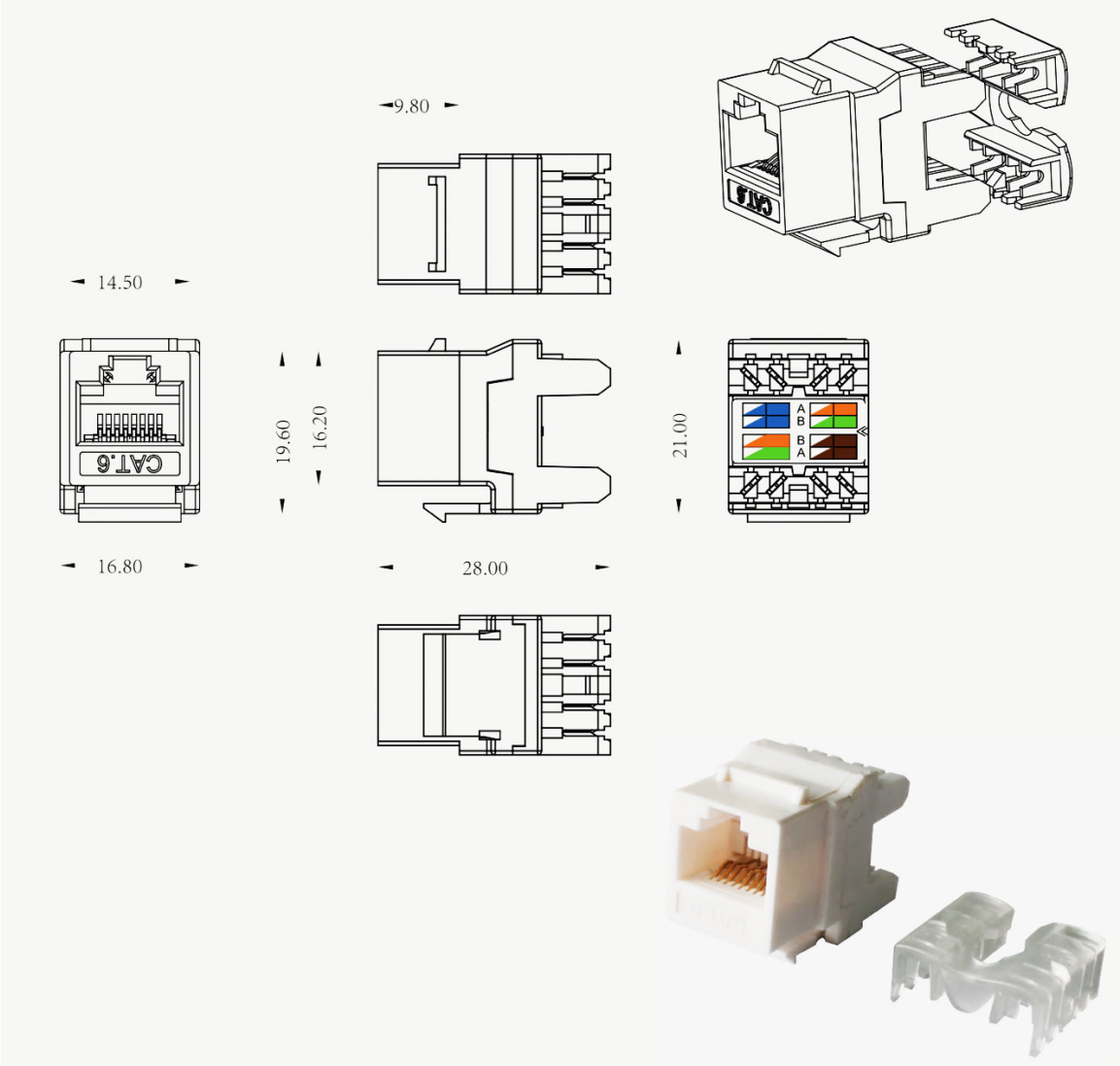

Technical Specifications:

Electrical Specifications:	
Voltage Rating:	125 VCA RMS
Current Rating:	1.5 Amps

Contact Resistance:	20 Milliohms Max
Insulation Resistance:	100 Megohms Min @ 500VDC
Dielectric Strength:	750 VAC RMS @ 60Hz/1min
C6 Permanent Link:	Conform with ANSI/TIA-568.2-E
Mechanical Specifications:	
Housing Material:	PC
Insert Material:	PC
PCB Material:	FR-4 T=1.2mm
Contact Material:	Phosphor Bronze Stamp Pin T=0.35mm
IDC Contact Material:	Phosphor Bronze T=0.50mm with Tin plating
RJ45 Jack Life:	750 Times (min)
IDC Life:	200 Times (min)
Wire:	AWG 22-24
TIA Cat-6 Perm. Link test: Worst pair NEXT margin ≥ 3.0dB	
Retentiveness of insertion structure: 50N 60±5s	
Environmental:	
Storage Temp:	-40 to +70C
Operation Temp:	-10 to +60C
Mates with modular plug conforming to FCC Part 68, Subpart F	

Ordering Information:

Part number	Description
NEW-3662204	Newlink UTP Cat-6 Keystone Jack 180 Degree Gray
NEW-3662206	Newlink UTP Cat-6 Keystone Jack 180 Degree Blue
NEW-3662208	Newlink UTP Cat-6 Keystone Jack 180 Degree White
NEW-3662209	Newlink UTP Cat-6 Keystone Jack 180 Degree Red